PGV

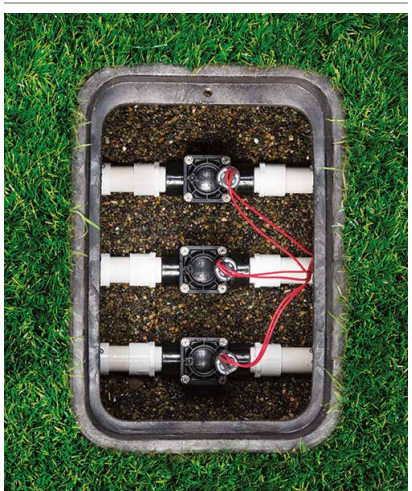

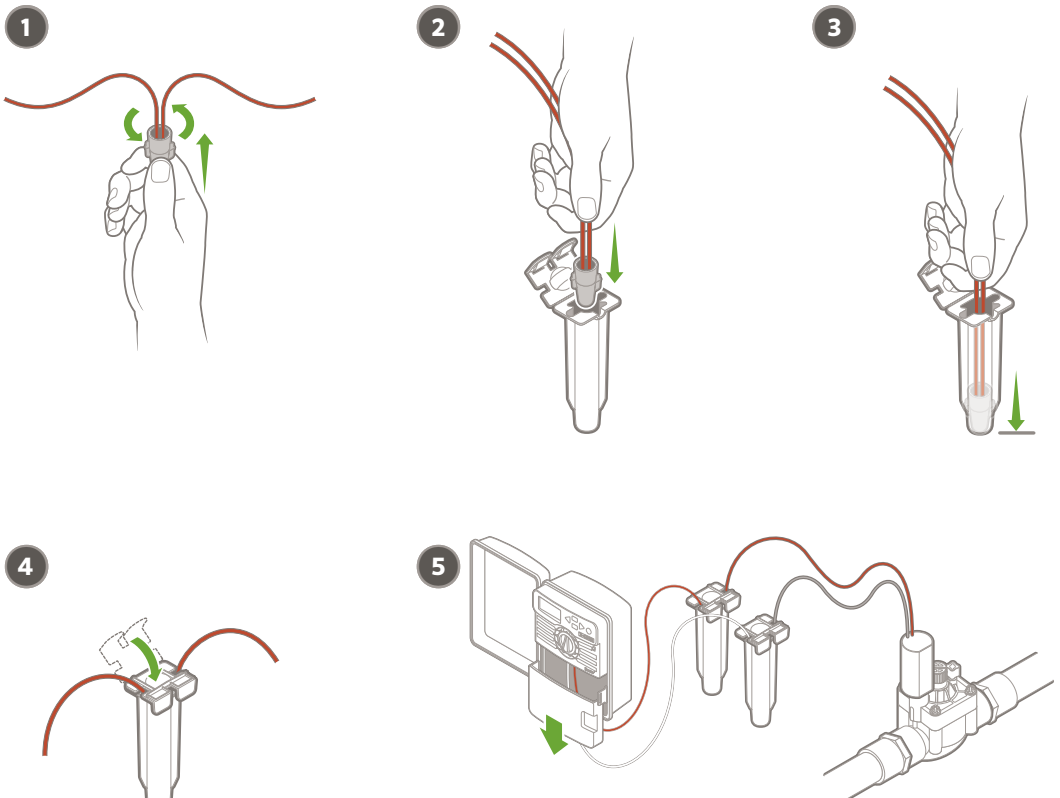

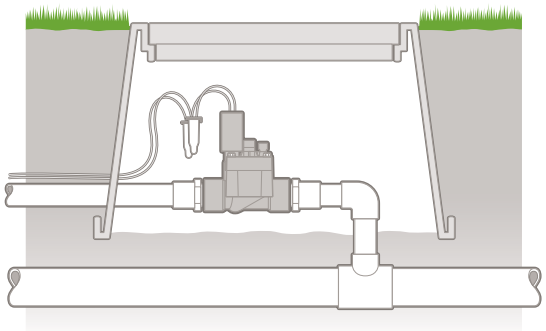

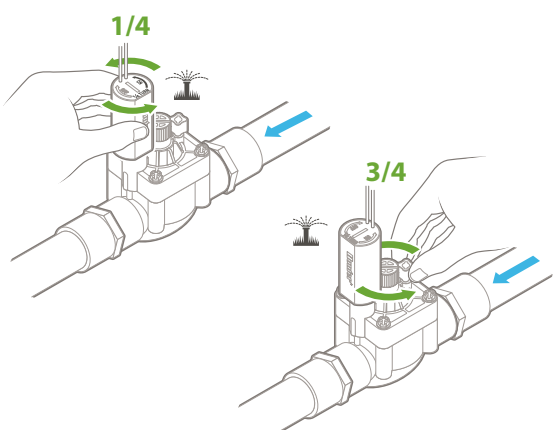
1/4
3/4

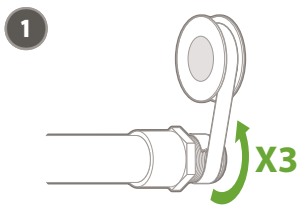
1
X3

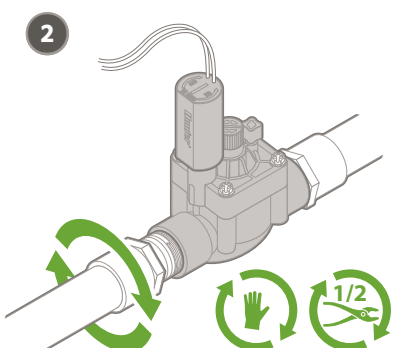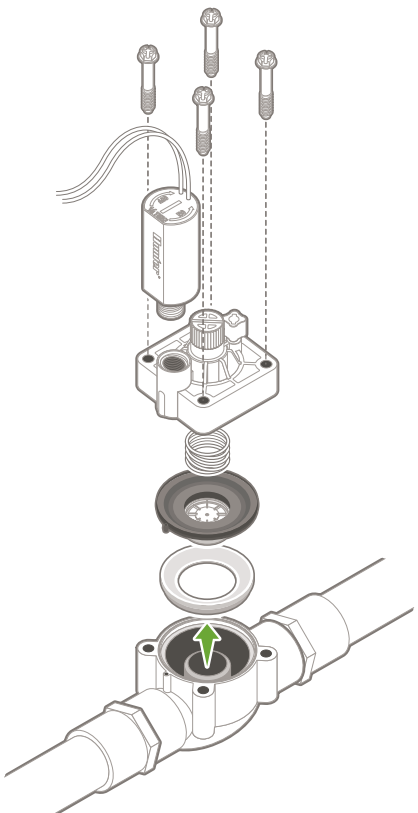
2
1/2